CITY OF LODI
PUBLIC WORKS DEPARTMENT

Sign Post Installation

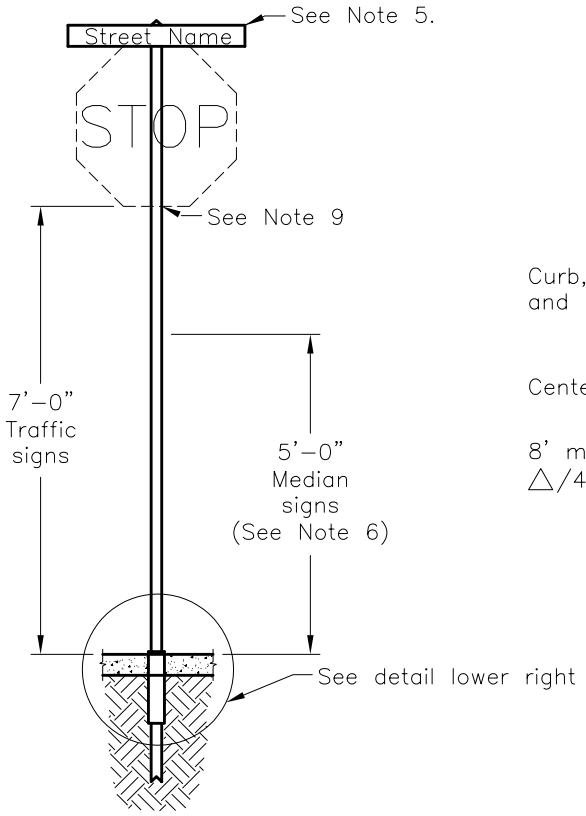

Sign Post

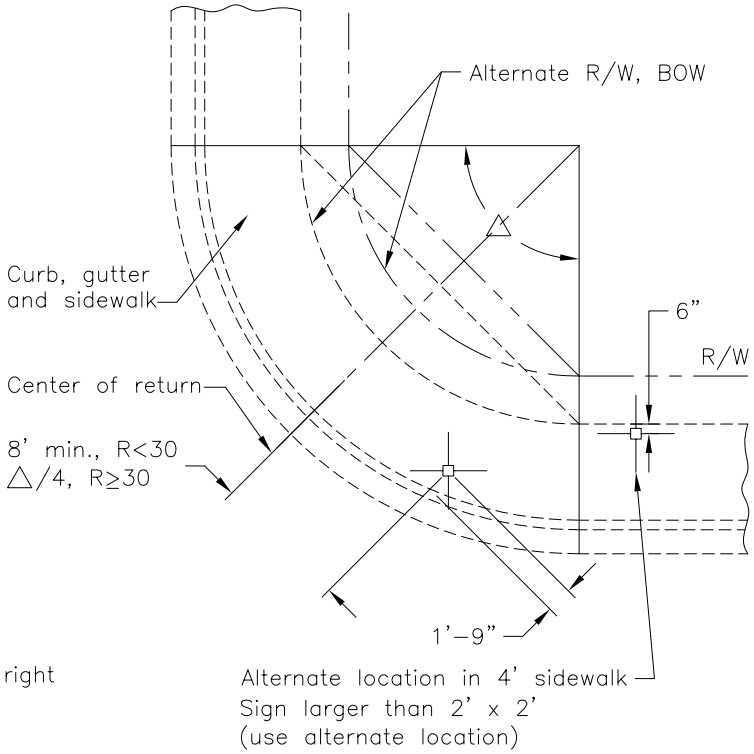

Sign Post Location

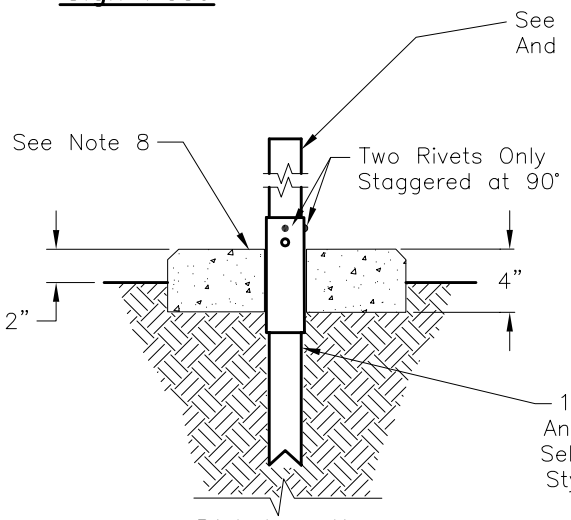

Dirt Location

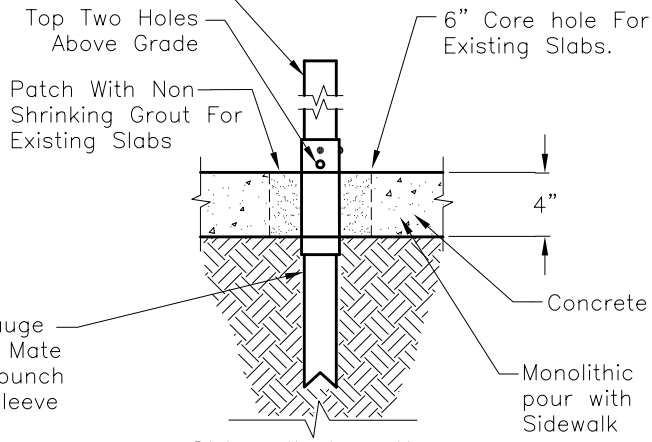

Sidewalk Location

Dr. KT	No.	Date	Revision	Appr.
	1	9/25	Changed 2"Ø Pipe to 2" Sq.	
Ch. WS	2	2/04	MOVED NOTES TO SECOND PAGE	
Date 12/00				

Approved By: F. Wally Sandelin, City Engineer, R.C.E. 39895 — 2/12/04 Date

STD PLAN 119

M:\STDPLANS\119.dwg, 04/08/2004 08:23:05 AM, jpizzo