CITY OF LODI

PUBLIC WORKS DEPARTMENT

Wastewater Service Cleanout

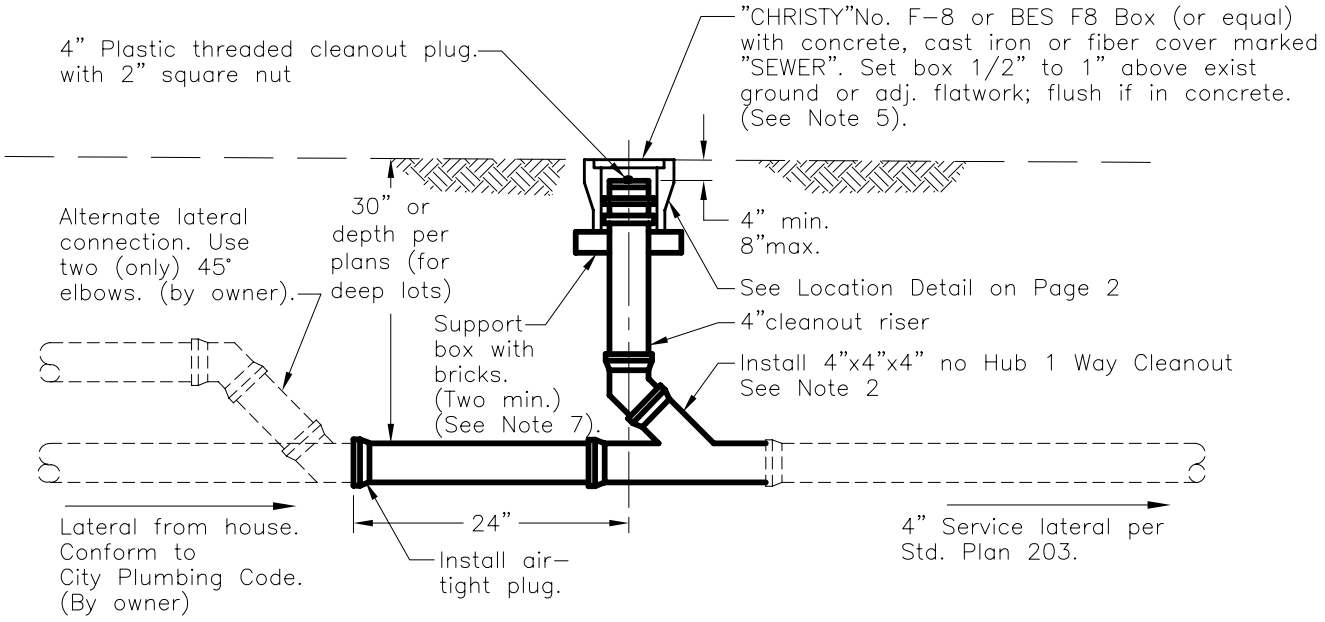

Notes:

1. Install cleanout on all 4" wastewater services unless otherwise specified.
2. 45° Wye & 45° elbow combination shall be Polyvinyl Chloride (PVC) per ASTM D-3034 SDR 35 or Acrylonitrile-Butadiene-Styrene (ABS) per ASTM D-2751, Cast Iron Soil Pipe (ASTM A74, service unit) or Ductile Iron (ASTM A746) or VCP Wye tee ASTM C-425. See Material List Page 2.
3. Backfill shall conform to Std. Plan 501.
4. Maintenance of lateral shall be per City "Wastewater Lateral Maintenance Policy"
5. In commercial driveways. Use "Christy" G-5 box W/G-5C lid or BES equal; in residential driveways replace concrete lid with cast iron lid.
6. When service is installed with water service, terminate even with the water stub.
7. Support box not needed if set in concrete.

Related Plans: 203, 506

Sheet 1 of 2

Dr. KT	No.	Date	Revision	Appr.
	1	9/25	MOVED C.O. LOCATION	
Ch. WS				
Date 12/00				

Approved By: F. Wally Sandelin, City Engineer, R.C.E. 39895 — 9/25/02 Date

STD PLAN 201

CITY OF LODI

PUBLIC WORKS DEPARTMENT

Wastewater Service Cleanout

LOCATION DETAILS

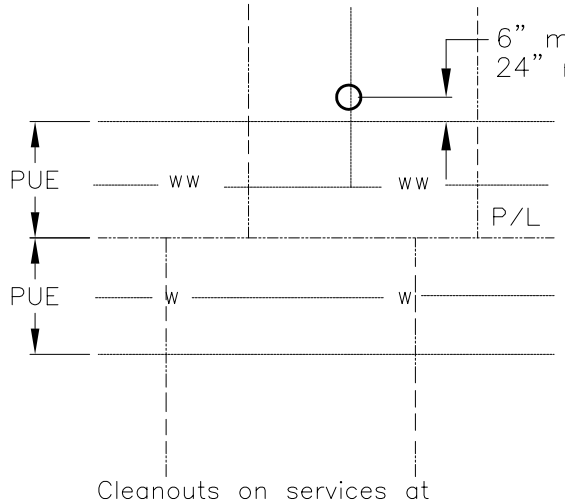

Cleanouts on services at easements installed 6" to 24" outside the easement.

Easement Service

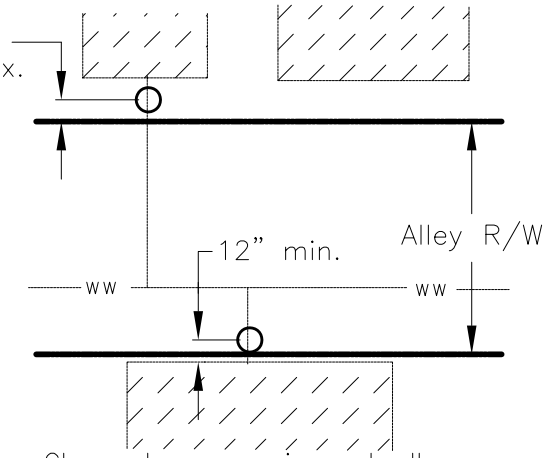

Cleanouts on services at alleys to be installed 6" to 24" outside the alley R/W or 12" within the alley where structures interfere with on-site locations.

Alley Service

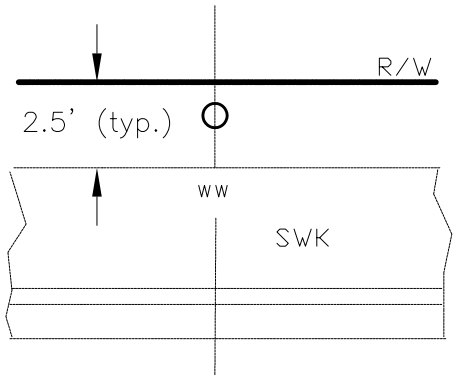

Cleanouts on services at streets to be installed between the R/W & B.O.W.

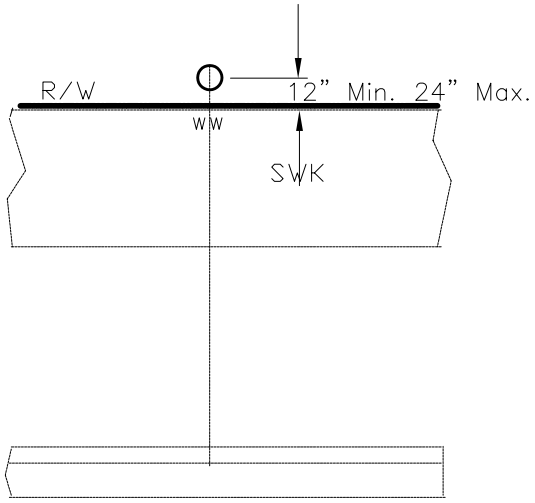

Street Service

Material List for STD PLN 201
City Approved 1-Way Cleanouts (a)

GPK Products Inc.	Solvent Weld SCH 40 DWV
Mueller Industries, Inc.	TY Long Turn

(a) or approved equal

Sheet 2 of 2

Dr. KT	No.	Date	Revision	Appr.
Ch. WS	1	9/25	MOVED C.O. LOCATION	
Date 12/00				

Approved By: F. Wally Sandelin, City Engineer, R.C.E. 39895 — 9/25/02 Date

STD PLAN 201

CITY OF LODI

PUBLIC WORKS DEPARTMENT

Monitoring Structure

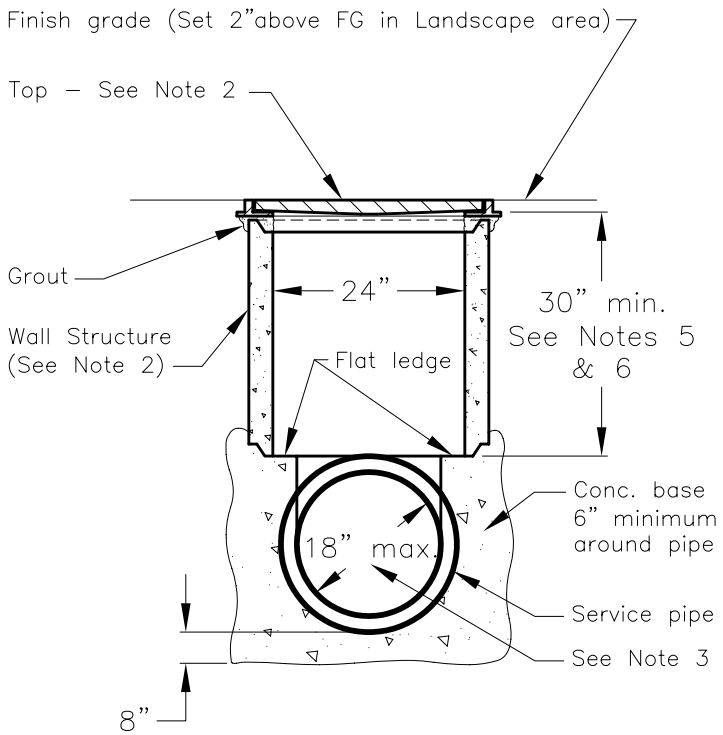

Section

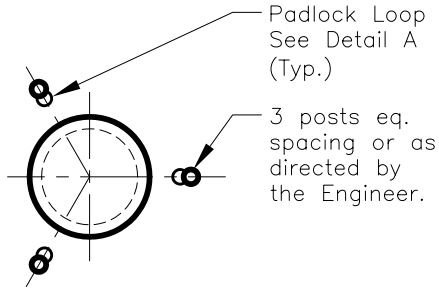

Bollard Location Detail

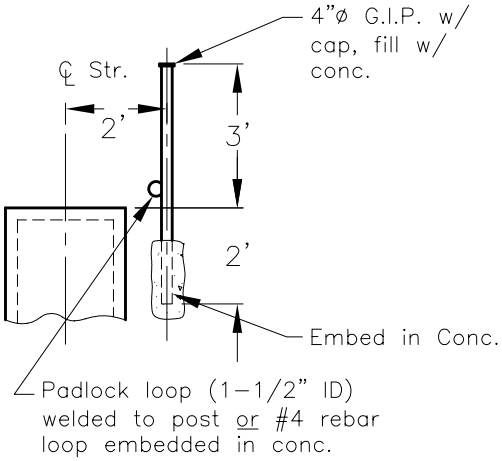

Detail A

Notes:

1. Monitoring structures shall be installed on storm and wastewater services when required by the Engineer or as shown on the plans. Normal location is between the back of sidewalk and the R/W.
2. Construction guidelines:

Location	Wall	Top
Traffic Area	Precast conc. per ASTM C–478 or 6" CIP conc.	Frame & Cover per Std Plan 309
Landscape Area	Precast pipe – VCP, RCP or CP	Expandable Plug

3. For services over 18"ø, consult Engineering Division.
4. Monitoring structure to be privately owned and maintained.
5. Where 30" min. depth cannot be maintain, the structure shall be located behind the sidewalk and be installed with padlock loop per Detail A.
6. Posts required when structure is less than 30" and is located in a traffic area.
7. For trench backfill requirements, See Std. Pln 501.

Dr. KT	No.	Date	Revision	Appr.	Approved By:	STD PLAN
Ch. WS					F. Wally Sandelin, City Engineer, R.C.E. 39895 — 12/28/00 Date	202
Date 12/00						

CITY OF LODI

PUBLIC WORKS DEPARTMENT

Wastewater Service

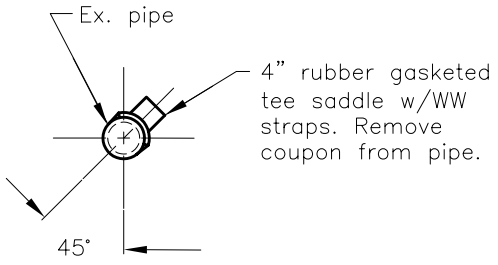

Detail A

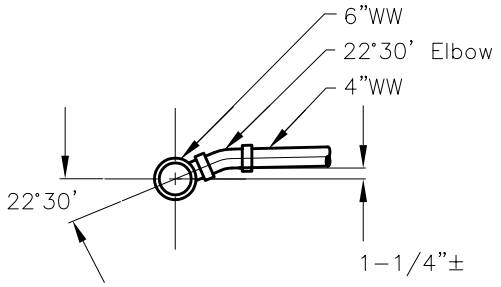

Alt. Detail

(To be used only w/ approval of Engineer on shallow mains)

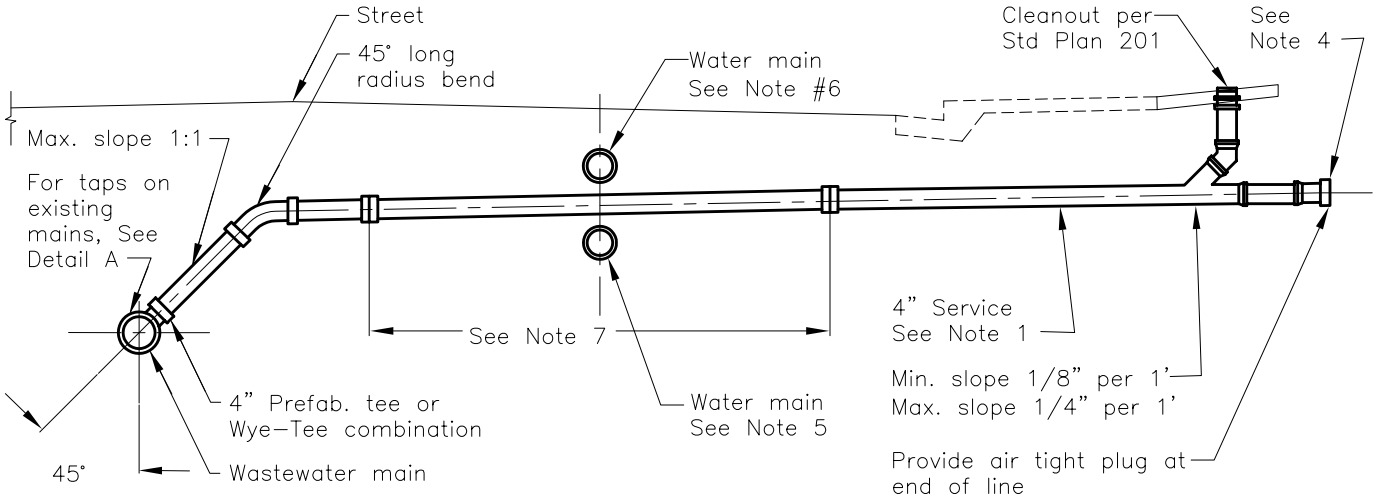

Section

Notes:

1. Pipe shall be Vitrified Clay Pipe per ASTM C-700 with compression joint per ASTM C-425 or compression coupling per ASTM C-594; Polyvinyl Chloride Pipe per ASTM D-3034 SDR 35; or Ductile Iron Class 50 with Compression Joint and Rubber Ring per ASTM D 1869. 6" and larger services per plans and waste water main standards.
2. Backfill shall conform to Std. Plan 501.
3. Taps on existing mains shall be made by the Contractor per Detail A when shown on the plans or approved by the Engineer.
4. When service is installed with water service, terminate even with the water stub.
5. Where service crosses over WM, 4" min. clearance and special construction are required (See Note 7)
6. Where service crosses under WM with less than 12" clearance, 4" clearance and special construction are required. (See Note 7)
7. Special construction: center length of pipe on water main. Short stick clay pipe not allowed. When service constructed under this condition (See Note 1)

Dr. KT	No.	Date	Revision	Appr.	Approved By:	STD PLAN
Ch. WS					F. Wally Sandelin 12/28/00	203
Date 12/00					F. Wally Sandelin, City Engineer, R.C.E. 39895 — Date	

CITY OF LODI

PUBLIC WORKS DEPARTMENT

Wastewater Interceptor

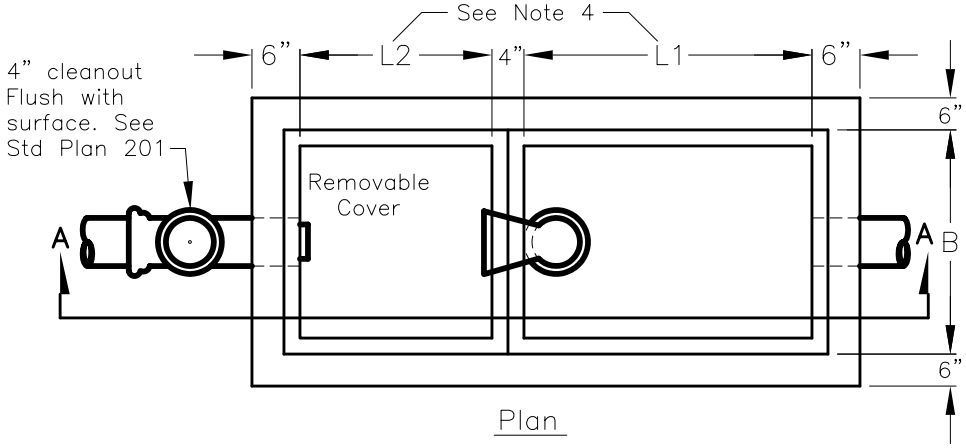

Plan

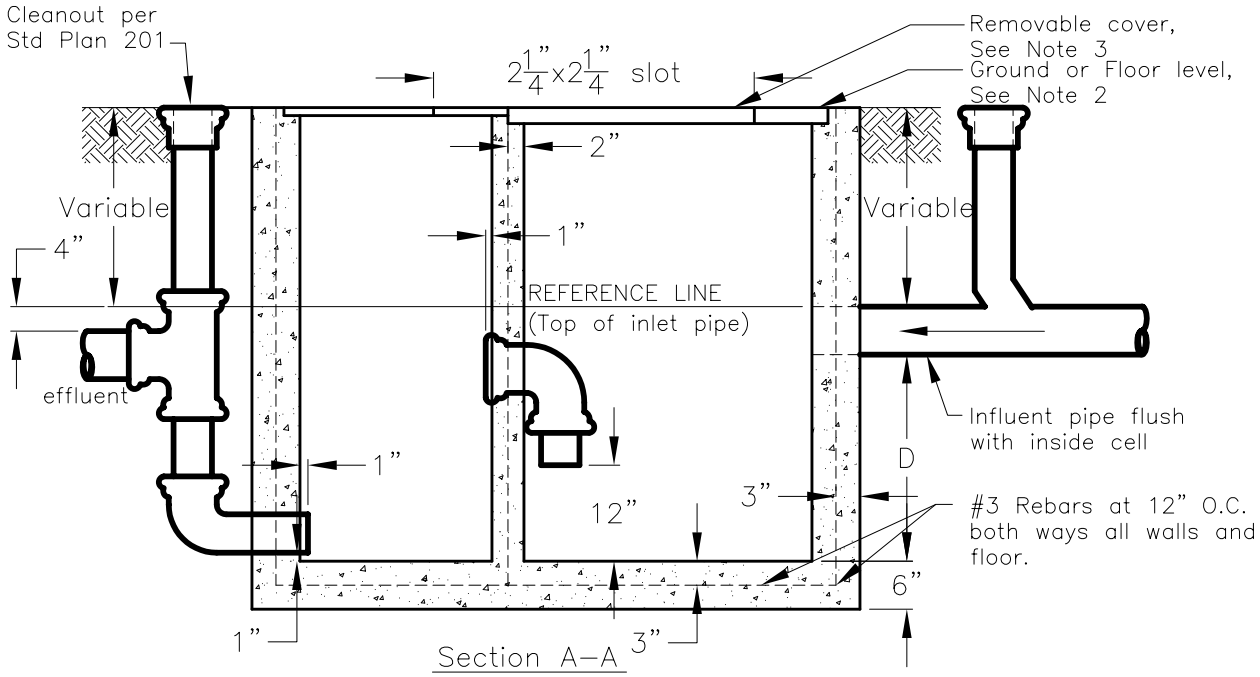

Section A–A

Notes:

1. Precast commercial units are acceptable with prior approval.
2. Waste Interceptor shall not be located in heavy traffic areas. Interceptor shall be installed at ground surface elevation higher than all storm sewer inlet elevations on the property.
3. Removable cover design shall be dictated by strength and location requirements as determined by the installer, but shall be of such a design to provide convenient access to each entire compartment for cleaning. The cover may be sectional, but shall be of solid design, essentially waterproof, installed at or near ground or floor level and kept clear of all obstructions so as to be readily accessible for cleaning and inspection.
4. For flows over 165 gpm the capacity of interceptor required for waste shall be individually determined by Public Works Department.
5. Waste Interceptor to be outside any fencing and subject to inspection at all times.

Sheet 1 of 2

Dr. KT	No.	Date	Revision	Appr.	Approved By:	STD PLAN
Ch. WS					F. Wally Sandelin 12/28/00	204
Date 12/00					F. Wally Sandelin, City Engineer, R.C.E. 39895 — Date	

CITY OF LODI

PUBLIC WORKS DEPARTMENT

Waste Interceptor

Peak flow into interceptor (GPM)	Inches			
	B	D	L1	L2
0–67	24	30	36	24
67–112	30	30	48	30
112–165	36	36	60	36

Over 165 GPM, See Note 4

Note:

Total rated discharge capacity of all fixtures, equipment or appliances discharging into interceptor in accordance with uniform plumbing code or actual flow rate.

Dr. KT	No.	Date	Revision	Appr.	Approved By: F. Wally Sandelin, City Engineer, R.C.E. 39895 — 12/28/00 Date	STD PLAN 204
Ch. WS						
Date 12/00						

CITY OF LODI

PUBLIC WORKS DEPARTMENT

Sand/Oil Trap

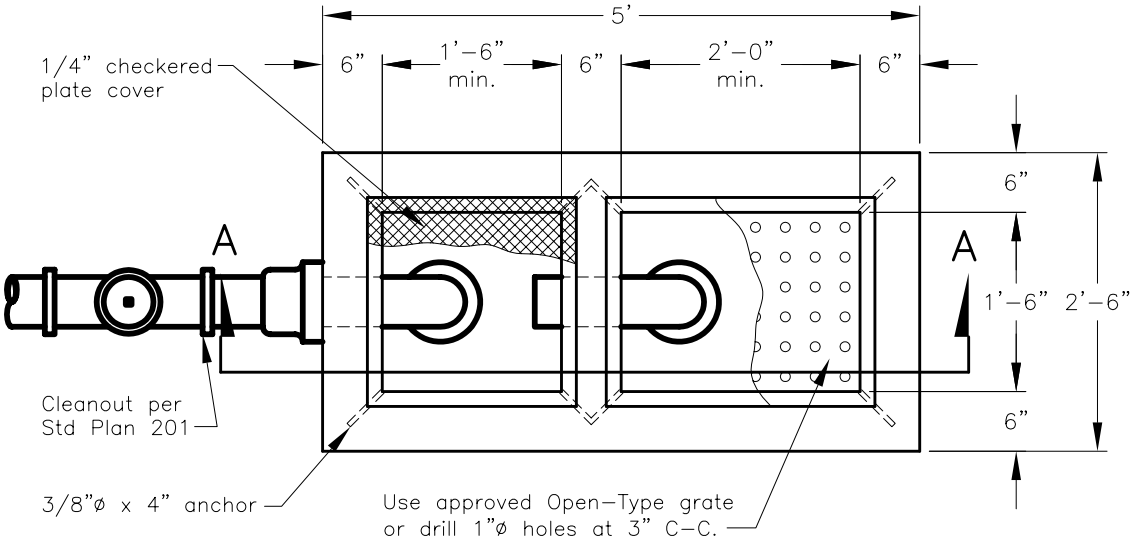

Plan

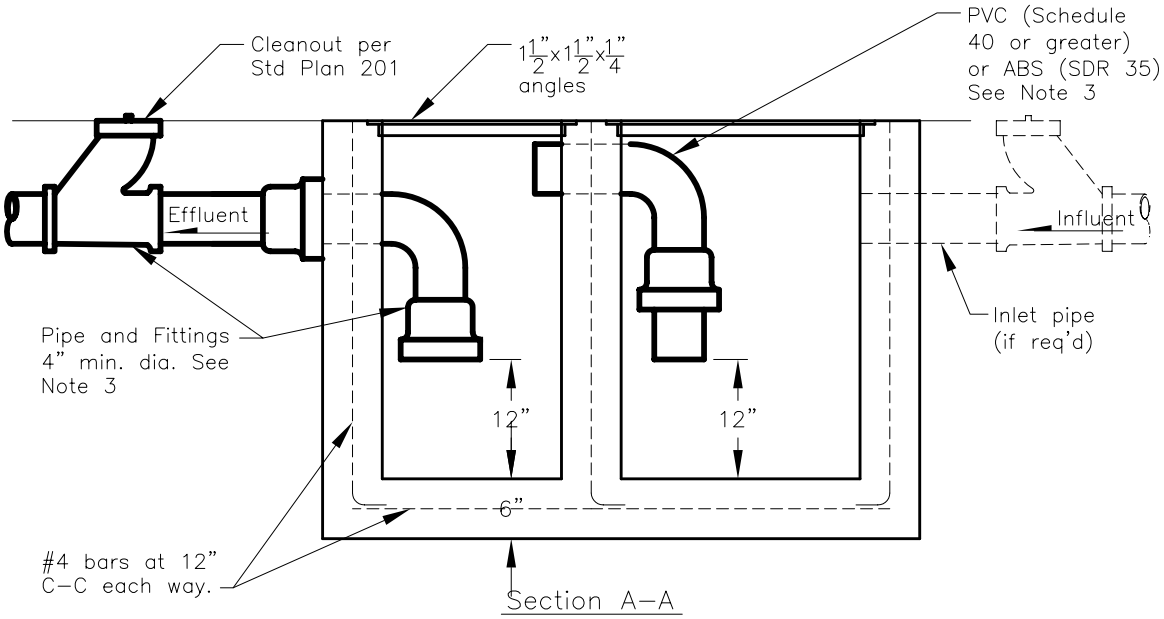

Section A-A

Notes:

1. All exposed steel to be galvanized after fabrication.
2. Precast commercial units are acceptable with prior approval.
3. For petrochemical applications cast iron fittings and piping shall be used.
4. Floor to drain to open grate or drilled plate cover.

Dr. KT	No.	Date	Revision	Appr.	Approved By:	STD PLAN
Ch. WS					F. Wally Sandelin 12/28/00	205
Date 12/00					F. Wally Sandelin, City Engineer, R.C.E. 39895 — Date	