CITY OF LODI

PUBLIC WORKS DEPARTMENT

Catch Basin Assembly
Curb Inlet Sidewalk Type

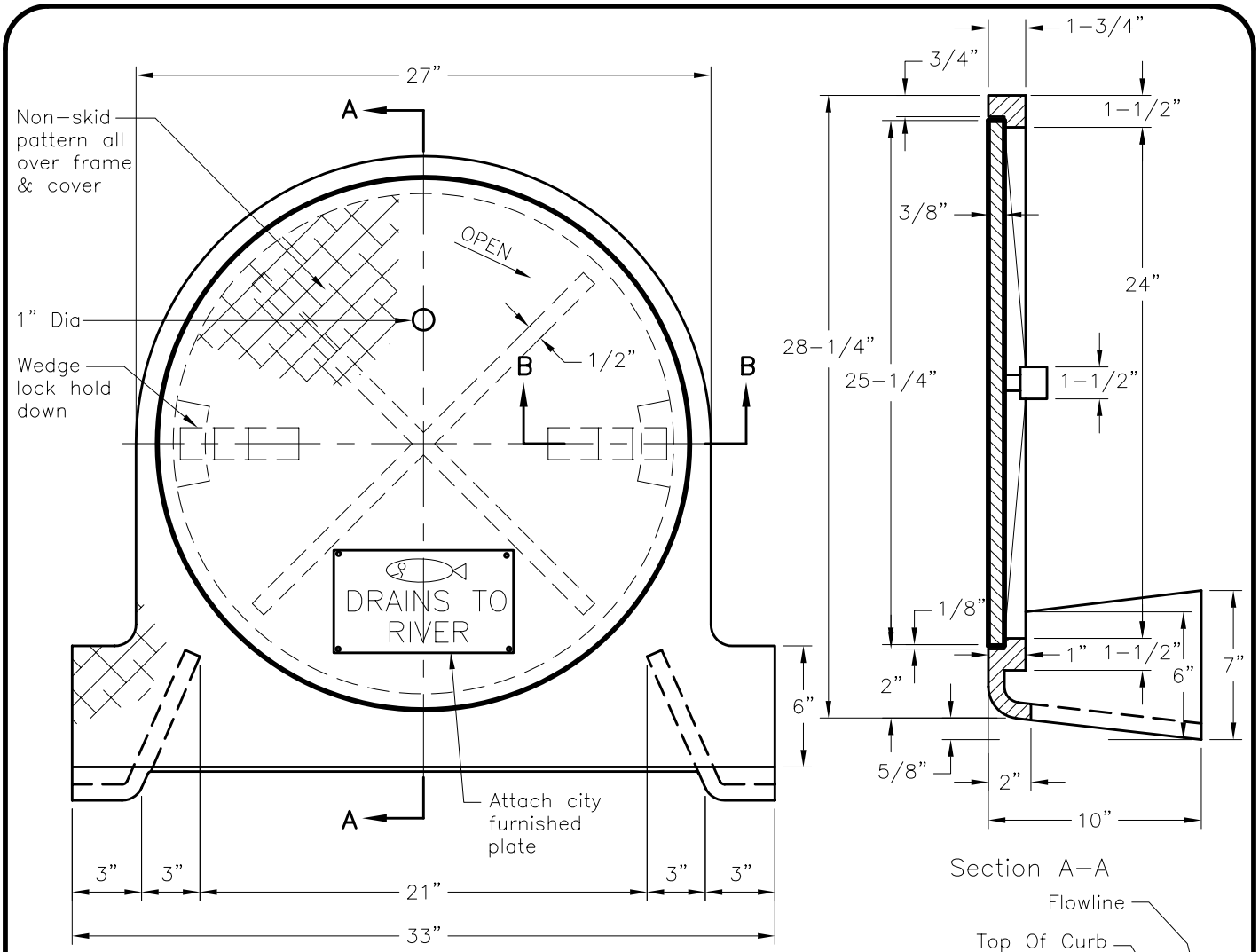

Section A–A

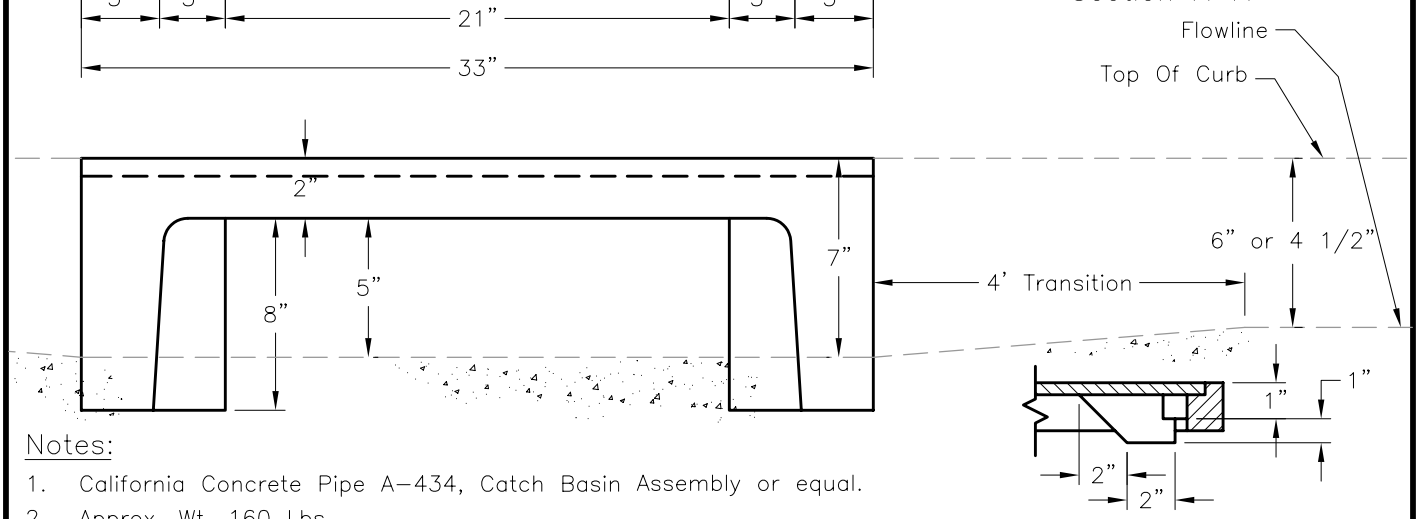

Section B–B

Notes:

1. California Concrete Pipe A–434, Catch Basin Assembly or equal.
2. Approx. Wt. 160 Lbs.
3. Material – Cast Iron.

Dr. KT	No.	Date	Revision	Appr.
Ch. WS	1	2/04	REVISED OPENING DIMENSION	
Date 12/00				

Approved By: F. Wally Sandelin, City Engineer, R.C.E. 39895 — 2/12/04 Date

STD PLAN 307

M:\STDPLANS\307.dwg, 04/07/2004 02:42:02 PM, jpizzo