CITY OF LODI

PUBLIC WORKS DEPARTMENT

Water Valve Frame & Cover

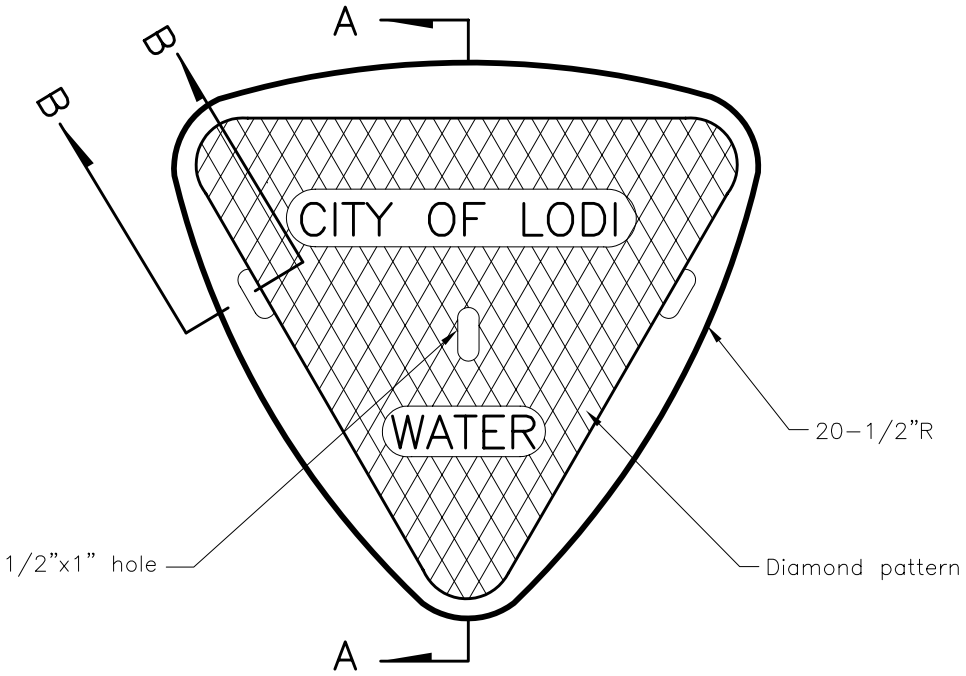

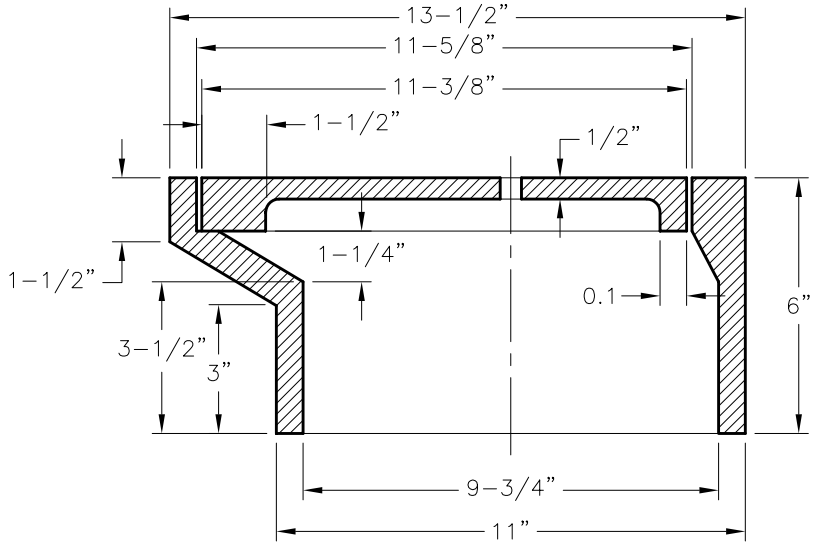

Section A–A

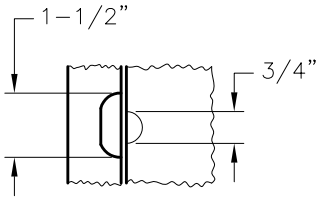

Plan View

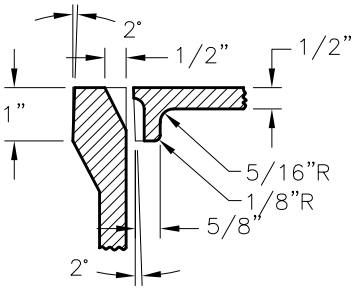

Section B–B

Notes:

1. Frame – Wt 50 Lbs.
2. Cover – Wt 16 Lbs.
3. Material – Cast Iron

Dr. KT	No.	Date	Revision	Appr.	Approved By:	STD PLAN
Ch. WS					F. Wally Sandelin 12/28/00	408
Date 12/00					F. Wally Sandelin, City Engineer, R.C.E. 39895 — Date	